Technical Data

	Unit	Value	
Ball Screw Lead	mm	6	10
Max. Velocity	mm/s	200 (w/ 23L20) 300 (w/ 23S30)	333 (w/ 23L20) 500 (w/ 23S30)
Force (w/ 23L20)	N	820	492
		Standard	P Grade
Repeatability	mm	±0.01	±0.003
Positioning Accuracy	mm	No Standard Defined	50 -300 Stroke: 0.02 400-500 Stroke: 0.025
Running Parallelism	mm	No Standard Defined	50 -300 Stroke: 0.01 400-500 Stroke: 0.015
Backlash	mm	0.02	0.003
Starting Torque	N/cm	7	15

Bill of Materials

Part No.	Description	Quantity
KR30H	Actuator	1
KR30-BKT-NEMA23	Bracket	1
23L20C / 23S30C	Motor	1
RCLA25C-6-6.35	Coupling	1
M4-10mm	Screws	4
M4-14mm	Screws	4

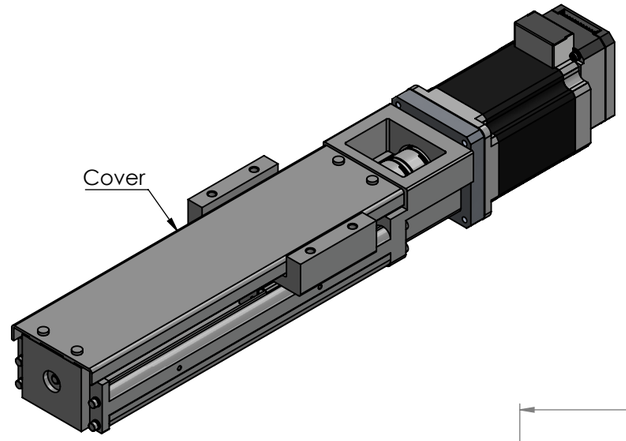

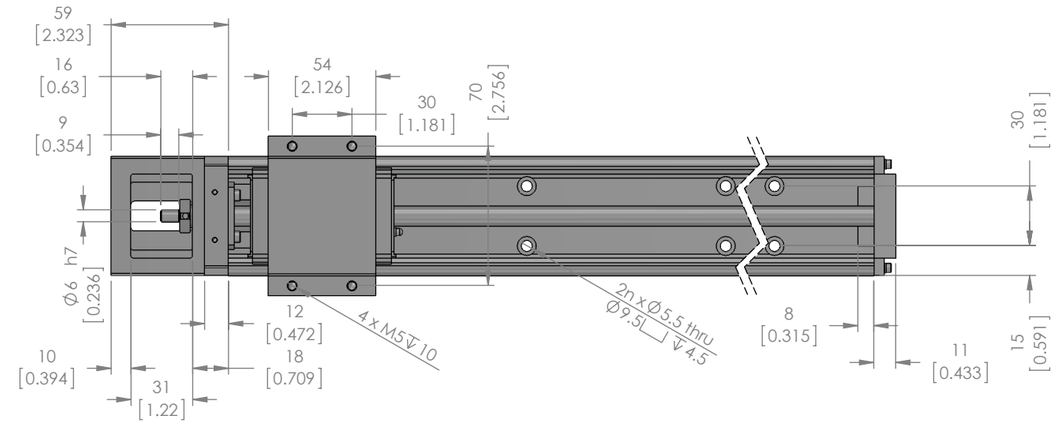

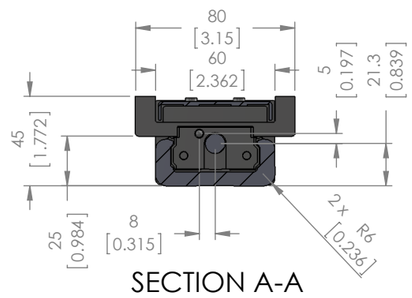

SECTION A-A

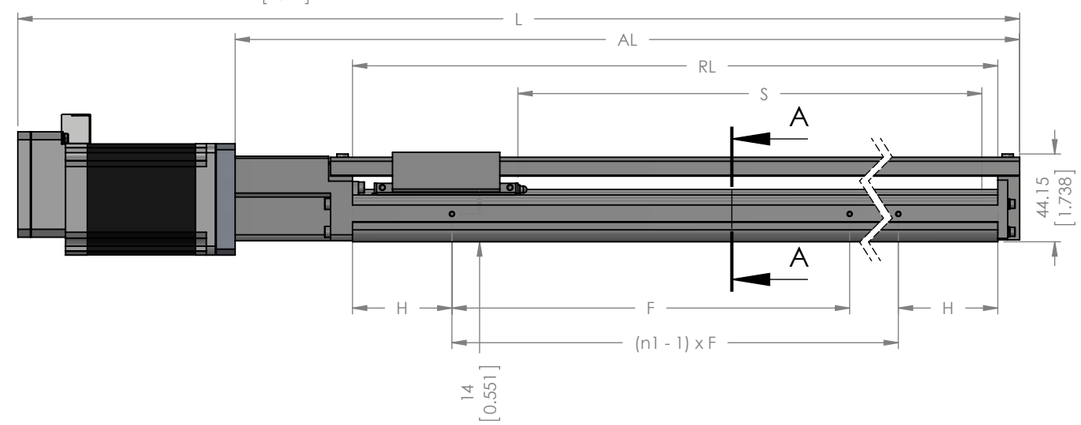

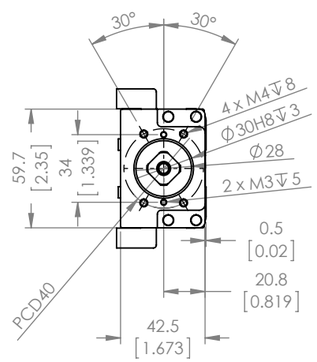

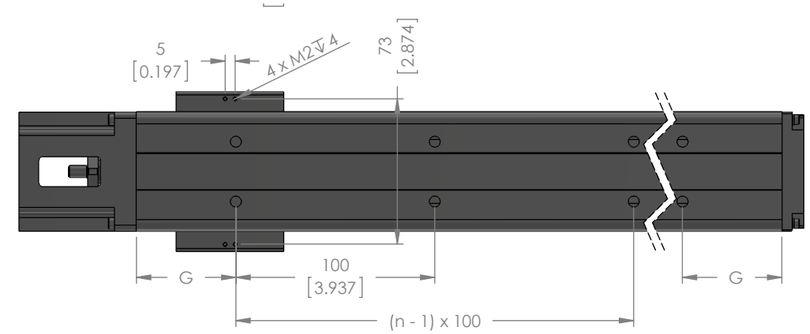

PA33-□□□	Mass (kg)*	
	w/ 23S30	w/ 23L20
050	2.25	2.80
100	2.45	3.00
200	3.05	3.60
300	3.65	4.20
400	4.15	4.70
500	4.75	5.30

*For single block, with cover. Please contact for more details.

UNITS: mm [inch]

PA33-□□□	S - Stroke Length	RL - Rail Length	AL - Actuator Length	L - Overall Length		F	H	G	n	n1
				w/ 23S30	w/ 23L20					
050	58.8 [2.315]	150 [5.906]	220 [8.661]	295.5	329.5	100 [3.937]	25 [0.984]	25 [0.984]	2	2
100	108.8 [4.823]	200 [7.874]	270 [10.630]	345.5	379.5	100 [3.937]	50 [1.969]	50 [1.969]	2	2
200	208.8 [8.220]	300 [11.811]	370 [14.567]	445.5	479.5	200 [7.874]	50 [1.969]	50 [1.969]	3	2
300	308.8 [12.157]	400 [15.748]	470 [18.504]	545.5	579.5	200 [7.874]	100 [3.937]	50 [1.969]	4	2
400	408.8 [16.094]	500 [19.685]	570 [22.441]	645.5	679.5	200 [7.874]	50 [1.969]	50 [1.969]	5	3
500	508.8 [20.032]	600 [23.622]	670 [26.378]	745.5	779.5	200 [7.874]	100 [3.937]	50 [1.969]	6	3

Unless otherwise specified, tolerance to be:CNS 4018 IT 14 Linear measures

0.5~3	± 0.1
3~6	± 0.1
6~30	± 0.2
30~120	± 0.3
120~315	± 0.5

PROPRIETARY AND CONFIDENTIAL
THE INFORMATION CONTAINED IN THIS DRAWING IS THE SOLE PROPERTY OF MYOSTAT MOTION CONTROL INC. ANY REPRODUCTION IN PART OR AS A WHOLE WITHOUT THE WRITTEN PERMISSION OF COOLMUSCLE INC. IS PROHIBITED.

	NAME	DATE
DRAWN	M.Mitchell	1-Aug-2014
CHECKED		
ENG APPR.		

Myostat Motion Control Inc.
1+ 905-836-4441
www.myostat.ca

DO NOT SCALE DRAWING | DIMENSIONS ARE METRIC

TITLE:

PA-Series Integrated Actuators

SIZE	PRT. NO.	REV
B	PA30-X-XX-XXX-X-XXXX-XXXXX-X	0.0

SCALE: 1:3 | WEIGHT: - | SHEET 1 OF 2

Technical Data

	Unit	Value	
Ball Screw Lead	mm	6	10
Max. Velocity	mm/s	200 (w/ 23L20) 300 (w/ 23S30)	333 (w/ 23L20) 500 (w/ 23S30)
Force (w/ 23L20)	N	820	492
		Standard	P Grade
Repeatability	mm	±0.01	±0.003
Positioning Accuracy	mm	No Standard Defined	50 -300 Stroke: 0.02 400-500 Stroke: 0.025
Running Parallelism	mm	No Standard Defined	50 -300 Stroke: 0.01 400-500 Stroke: 0.015
Backlash	mm	0.02	0.003
Starting Torque	N/cm	7	15

Bill of Materials

Part No.	Description	Quantity
KR30H	Actuator	1
KR30-BKT-NEMA23	Bracket	1
23L20C / 23S30C	Motor	1
RCLA25C-6-6.35	Coupling	1
M4-10mm	Screws	4
M4-14mm	Screws	4

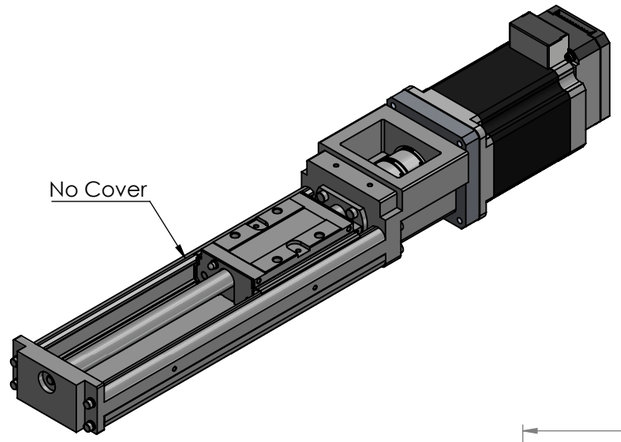

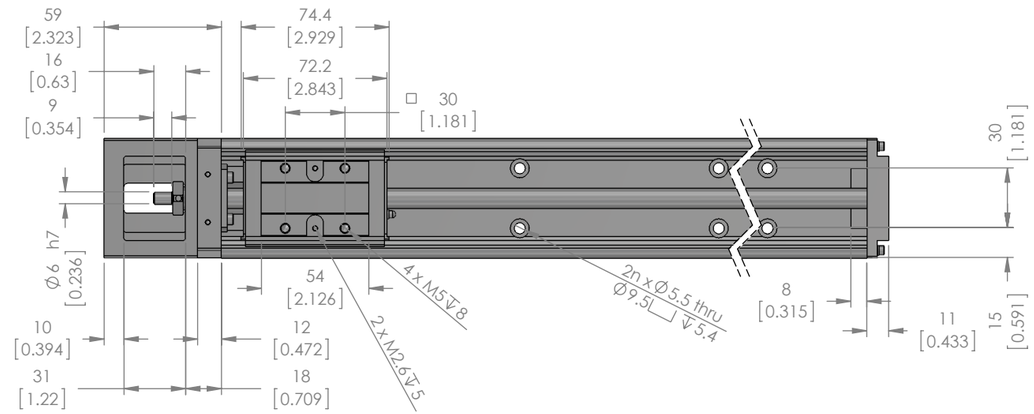

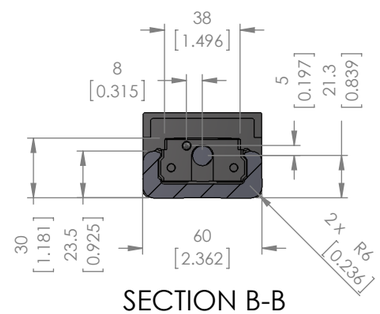

SECTION B-B

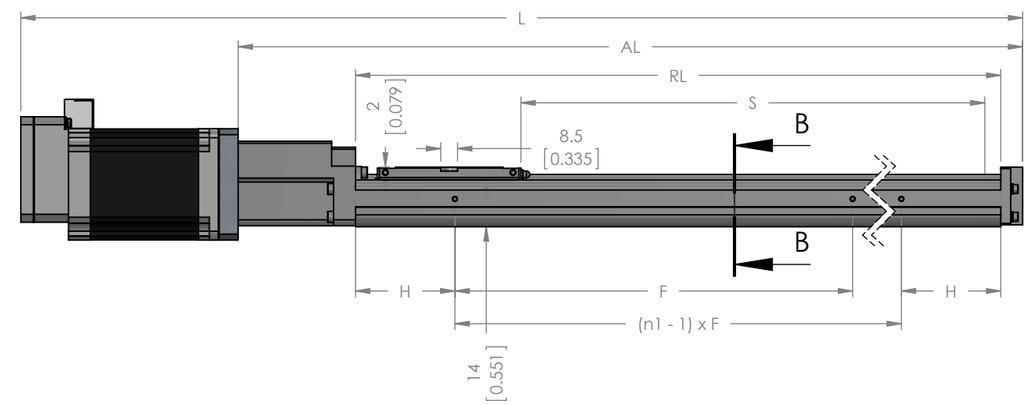

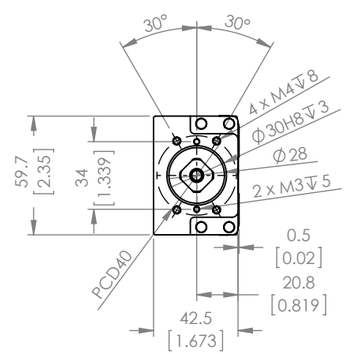

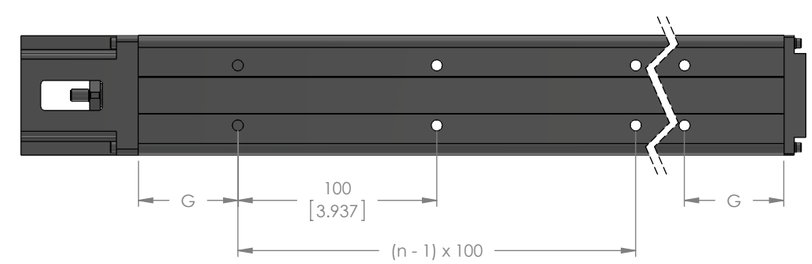

PA33-□□□	Mass (kg)*	
	w/ 23S30	w/ 23L20
050	2.05	2.60
100	2.25	2.80
200	2.85	3.40
300	3.35	3.90
400	3.85	4.40
500	4.45	5.00

*For single block, no cover. Please contact for more details.

UNITS: mm [inch]

PA33-□□□	S - Stroke Length	RL - Rail Length	AL - Actuator Length	L - Overall Length		F	H	G	n	n1
				w/ 23S30	w/ 23L20					
050	58.8 [2.315]	150 [5.906]	220 [8.661]	295.5	329.5	100 [3.937]	25 [0.984]	25 [0.984]	2	2
100	108.8 [4.823]	200 [7.874]	270 [10.630]	345.5	379.5	100 [3.937]	50 [1.969]	50 [1.969]	2	2
200	208.8 [8.220]	300 [11.811]	370 [14.567]	445.5	479.5	200 [7.874]	50 [1.969]	50 [1.969]	3	2
300	308.8 [12.157]	400 [15.748]	470 [18.504]	545.5	579.5	200 [7.874]	100 [3.937]	50 [1.969]	4	2
400	408.8 [16.094]	500 [19.685]	570 [22.441]	645.5	679.5	200 [7.874]	50 [1.969]	50 [1.969]	5	3
500	508.8 [20.032]	600 [23.622]	670 [26.378]	745.5	779.5	200 [7.874]	100 [3.937]	50 [1.969]	6	3

Unless otherwise specified, tolerance to be:CNS 4018 IT 14 Linear measures

0.5~3	± 0.1
3~6	± 0.1
6~30	± 0.2
30~120	± 0.3
120~315	± 0.5

PROPRIETARY AND CONFIDENTIAL
THE INFORMATION CONTAINED IN THIS DRAWING IS THE SOLE PROPERTY OF MYOSTAT MOTION CONTROL INC. ANY REPRODUCTION IN PART OR AS A WHOLE WITHOUT THE WRITTEN PERMISSION OF COOLMUSCLE INC. IS PROHIBITED.

	NAME	DATE
DRAWN	M.Mitchell	1-Aug-2014
CHECKED		
ENG APPR.		

Myostat Motion Control Inc.
1+ 905-836-4441
www.myostat.ca

DO NOT SCALE DRAWING | DIMENSIONS ARE METRIC

TITLE:

PA-Series Integrated Actuators

SIZE	PRT. NO.	REV
B	PA30-X-XX-XXX-X-XXXX-XXXXX-X	0.0

SCALE: 1:3 | WEIGHT: - | SHEET 2 OF 2